TAKS–M Grade 10 Math

Original TAKS Items

1 Ms. Adams bought a refrigerator that cost \$1200, including tax. The cost of electricity to run this refrigerator is estimated at \$78 per year. Which equation best represents c, the total cost of the refrigerator including electricity over n years of operation?

A $c = 1200(78n)$

B $c = 1200(n + 78)$

C $c = 1200 - 78n$

D* $c = 1200 + 78n$

Objective 1

2 A rectangle has a length of $2x + 1$ and a width of $5x - 4$. Which expression best describes the area of the rectangle?

A $7x - 3$

B $14x - 6$

C* $10x^2 - 3x - 4$

D $10x^2 + 13x - 4$

Objective 2

3 Which linear equation represents the line passing through points R and S?

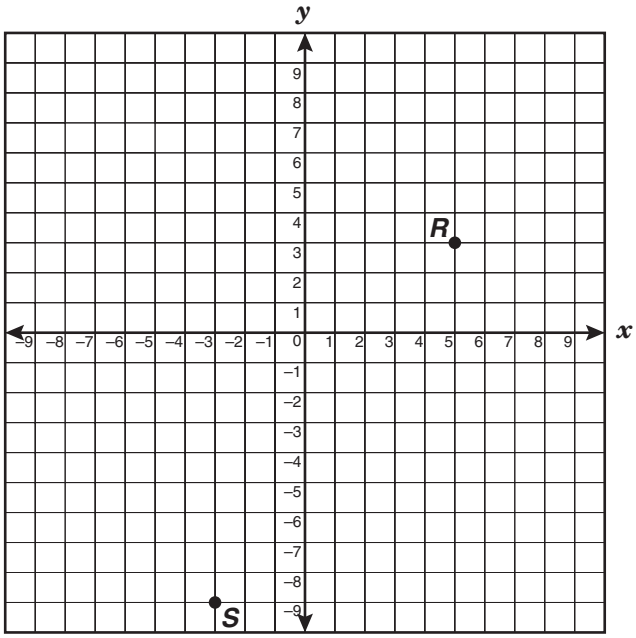

A* $y = 1.5x - 4.5$

B $y = 1.5x + 4.5$

C $y = 0.5x - 4.5$

D $y = 0.5x + 4.5$

Objective 3

4 Norma and Lauretta went to a store to buy DVDs on sale for \$5 each, tax included. Norma purchased two and a half times as many DVDs as Lauretta purchased. Together they purchased 14 DVDs. Which system of linear equations can be used to determine n, the number of DVDs Norma purchased, and l, the number of DVDs Lauretta purchased?

A $n + l = 14$
$n = \frac{1}{2}l$

B $5n + 5l = 14$
$l = \frac{1}{2}n$

C* $n + l = 14$
$n = \frac{5}{2}l$

D $n + l = 14$
$l = \frac{5}{2}n$

Objective 4

5 Which lists the functions of the form $y = ax^2$ in order from the widest to the narrowest graph?

A $y = \frac{7}{3}x^2,\ y = \frac{2}{3}x^2,\ y = \frac{1}{2}x^2,\ y = 2x^2$

B* $y = \frac{1}{2}x^2,\ y = \frac{2}{3}x^2,\ y = 2x^2,\ y = \frac{7}{3}x^2$

C $y = \frac{7}{3}x^2,\ y = 2x^2,\ y = \frac{1}{2}x^2,\ y = \frac{2}{3}x^2$

D $y = 2x^2,\ y = \frac{7}{3}x^2,\ y = \frac{1}{2}x^2,\ y = \frac{2}{3}x^2$

Objective 5

6 ΔKQR is translated so that R is mapped to R'.

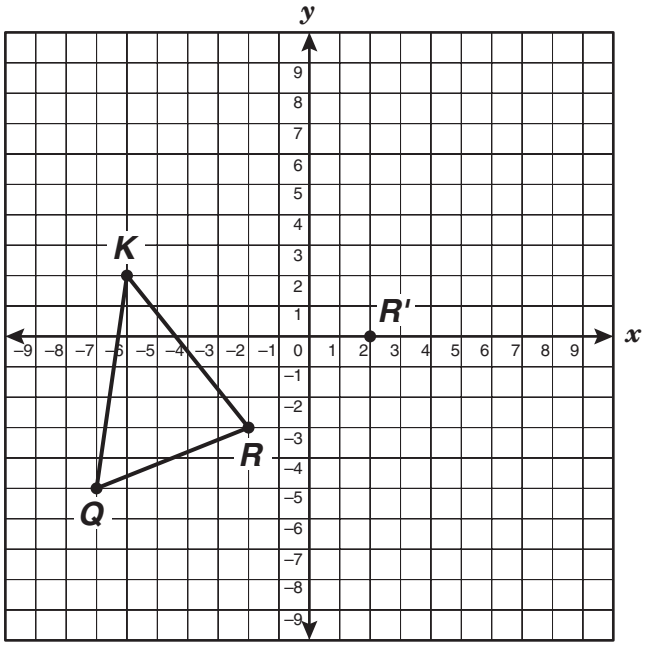

Which ordered pair best represents either point K' or point Q'?

A K' $(-3, 6)$

B Q' $(-4, -1)$

C K' $(5, -2)$

D* Q' $(-3, -2)$

Objective 6

7 The drawing shows the top view of a 3-dimensional object.

Top View

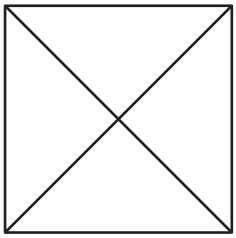

Which of the following drawings best represents this 3-dimensional object?

A

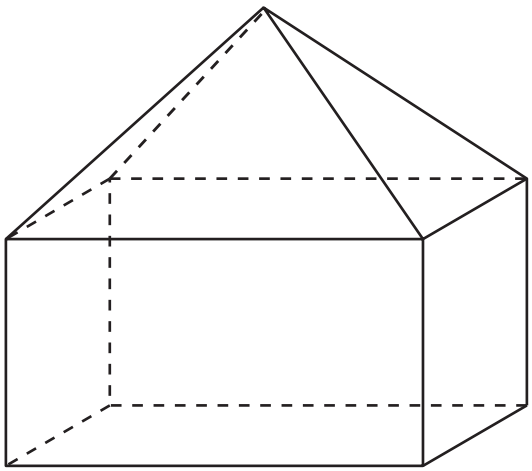

C*

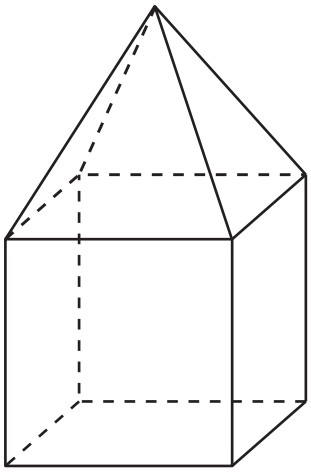

B

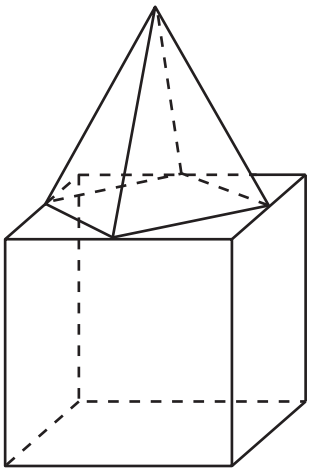

D

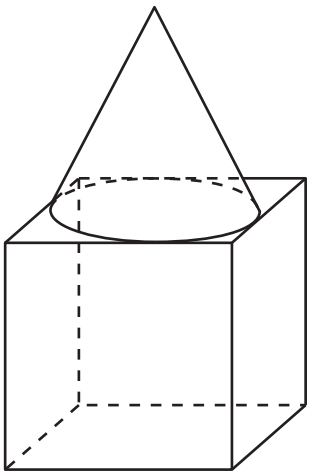

Objective 7

8 Trapezoid *KMPR* is similar to trapezoid *LNQS*.

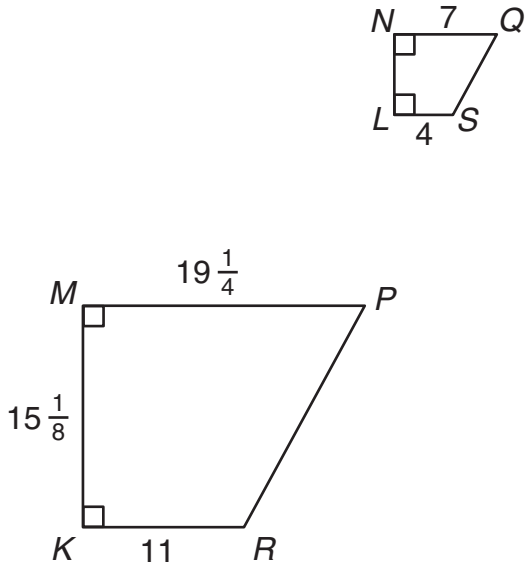

Which is closest to the perimeter of trapezoid *LNQS*?

A* 23 units

B 31 units

C 25 units

D 63 units

Objective 8

9 The table below shows the results of rolling a fair number cube 50 times during a classroom activity.

Number-Cube Data

Outcome	Frequency
1	7
2	12
3	10
4	9
5	8
6	4

What is the difference between the theoretical probability of rolling a number less than 4 and the experimental results recorded in the table above?

A* 8%

B 79%

C 58%

D 29%

Objective 9

10 A triangle is inscribed in a square, as shown below.

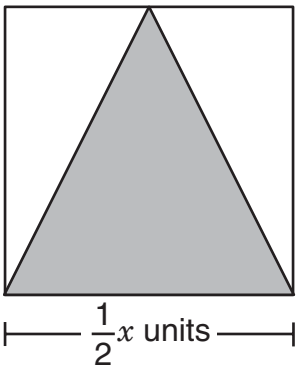

What is the area of the shaded triangle inscribed in the square?

A $\frac{1}{4}x^2$ units^2

B $\frac{1}{2}x^2$ units^2

C* $\frac{1}{8}x^2$ units^2

D $\frac{1}{16}x^2$ units^2

Objective 10

TAKS-M Items

1 Ms. Adams bought a refrigerator.

- The refrigerator cost $1200, including tax.
- It will cost about $78 per year for electricity to run this refrigerator.

Which equation best represents c, the total cost of this refrigerator including the cost of electricity to run it for n years?

A $c = 1200(n + 78)$

B $c = 1200 - 78n$

C* $c = 1200 + 78n$

Objective 1

2 A rectangle has a length of $2x$ and a width of $5x - 4$. Which expression best describes the area of the rectangle?

A $14x - 8$

B* $10x^2 - 8x$

C $10x^2 - 4$

Objective 2

3 Which linear equation represents the line passing through points *R* and *S*?

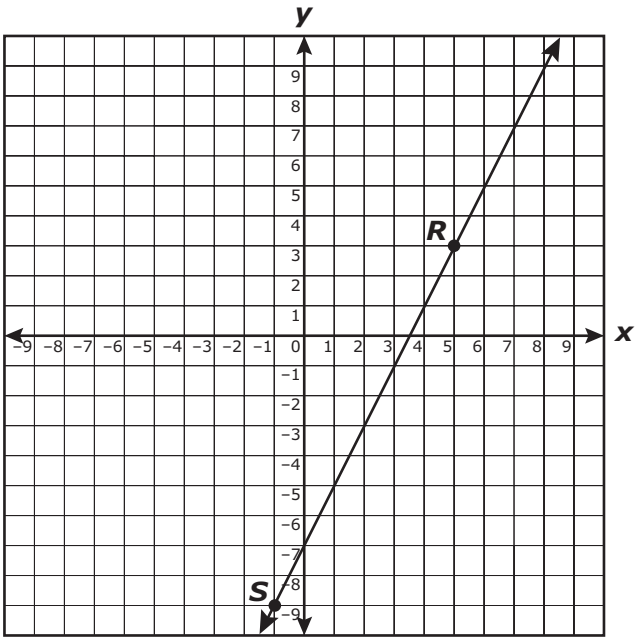

A* $y = 2x - 7$

B $y = 2x + 7$

C $y = \frac{1}{2}x - 7$

Objective 3

4 Norma and Laura went to a store to buy DVDs.

- Norma bought two times as many DVDs as Laura bought.
- Together they bought 15 DVDs.

Which pair of equations can be used to find n, the number of DVDs Norma bought, and l, the number of DVDs Laura bought?

A $l = 15n$
$n + l = 2$

B* $n = 2l$
$n + l = 15$

C $l = 2n$
$n + l = 15$

Objective 4

5 Which lists the functions in order from the most wide to the most narrow graph?

A $y = 7x^2,\ y = x^2,\ y = 2x^2$

B* $y = x^2,\ y = 2x^2,\ y = 7x^2$

C $y = 2x^2,\ y = 7x^2,\ y = x^2$

Objective 5

6 ΔKQR is translated so that R is mapped to R'.

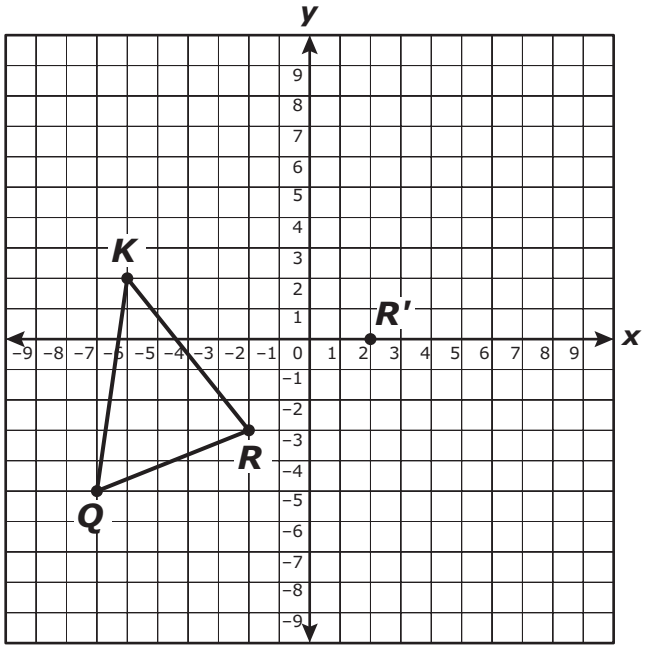

Which ordered pair best represents point Q'?

A Q' (−4, −1)

B Q' (7, −5)

C* Q' (−3, −2)

Objective 6

7 The drawing shows the top view of a 3-dimensional object.

Top View

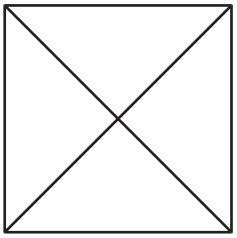

Which drawing best represents this 3-dimensional object?

A

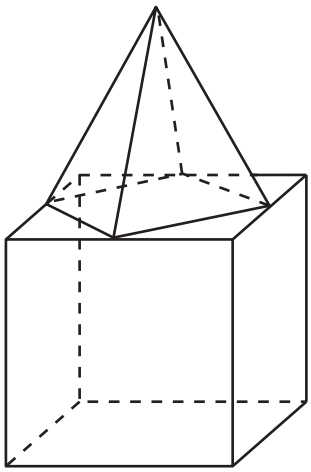

C

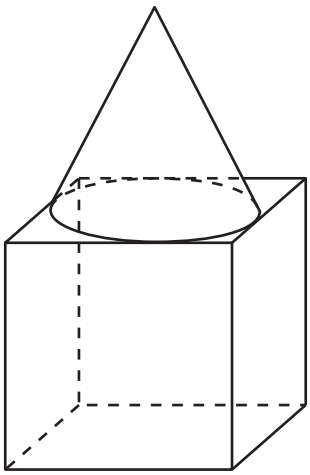

B*

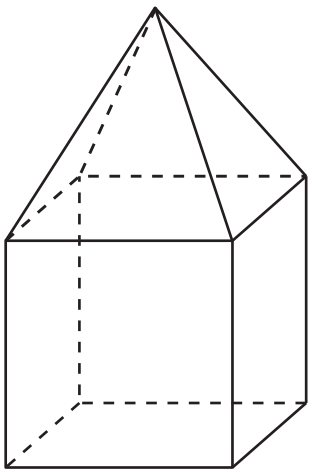

Objective 7

8 Trapezoid *KMPR* is similar to trapezoid *LNQS*.

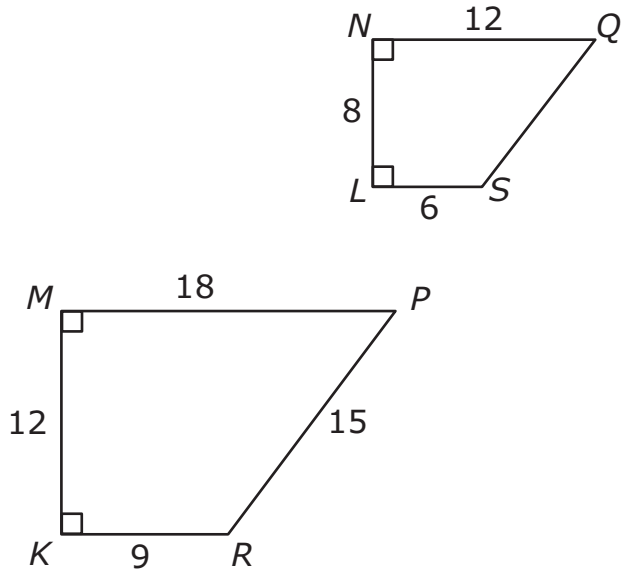

What is the perimeter of trapezoid *LNQS*?

A* 36 units

B 31 units

C 54 units

Objective 8

9 The table below shows the results of rolling a fair 6-sided number cube 30 times during a classroom activity.

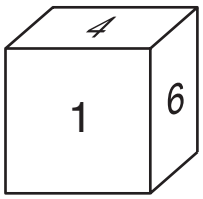

Number-Cube Data

Outcome	Frequency
1	4
2	5
3	8
4	6
5	2
6	5

Which statement is true for the cube landing on the number 4?

A* The theoretical probability is $\frac{1}{6}$, and the experimental result is $\frac{1}{5}$.

B The theoretical probability is $\frac{1}{5}$, and the experimental result is $\frac{1}{6}$.

C The theoretical probability is $\frac{1}{6}$, and the experimental result is $\frac{1}{4}$.

Objective 9

10 A triangle is inscribed in a square, as shown below.

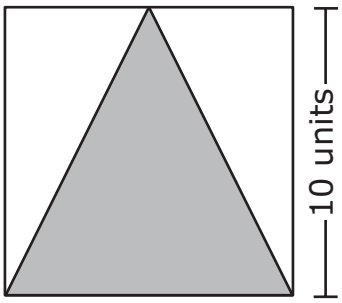

$A = s^2$ Area of a square = side · side
$A = \frac{bh}{2}$ Area of a triangle = $\frac{\text{base} \cdot \text{height}}{2}$

What is the area of the shaded triangle inscribed in the square?

A 100 units ^{2}

B* 50 units ^{2}

C 25 units ^{2}

Objective 10