TAKS-M

Texas Assessment of
Knowledge and Skills–Modified

MATHEMATICS
Grade 11

2010 Sample Items

Copyright © 2010, Texas Education Agency. All rights reserved. Reproduction of all or portions of this work is prohibited without express written permission from the Texas Education Agency.

1 Look at the table below. It shows the dollar value of a classic car over time.

Value of a Classic
Car over Time

Year	Value (dollars)
1972	2000
1982	4000
1992	6000
2002	8000

Based on the information in the table, what was the value of this car in 1987?

A $4300

B $5000

C $4500

1 Look at the graph below.

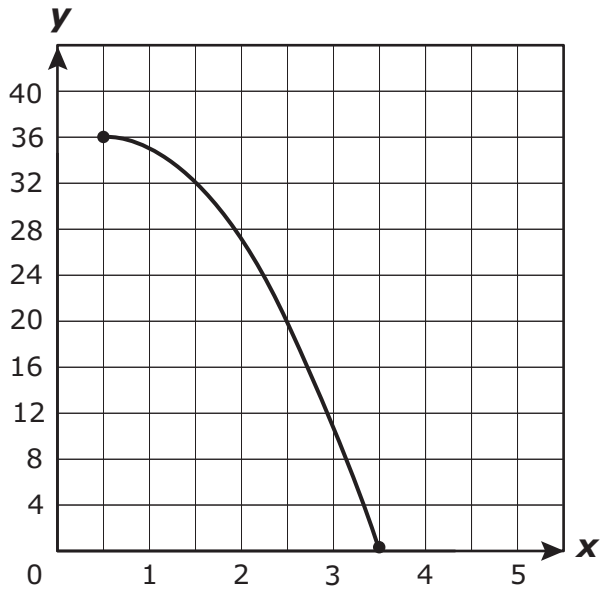

Which of the following is the domain for this graph?

A $0 \leq x \leq 4$

B $0 \leq x \leq 36$

C $0.5 \leq x \leq 3.5$

1 Which situation is best represented by the function $f(x)$, where $f(x) = 12x + 5$?

A A store sells x boxes of pens that contain a dozen pens per box for \$5 each.

B A test has x problems worth 12 points each and 5 extra-credit problems worth 5 points each.

C A company sells x baseball caps for \$12 each and charges a \$5 shipping fee.

2 A math club orders some candy bars to sell. The graph below shows the total cost for an order of fewer than 5 boxes of candy bars, including the standard fee for shipping and handling.

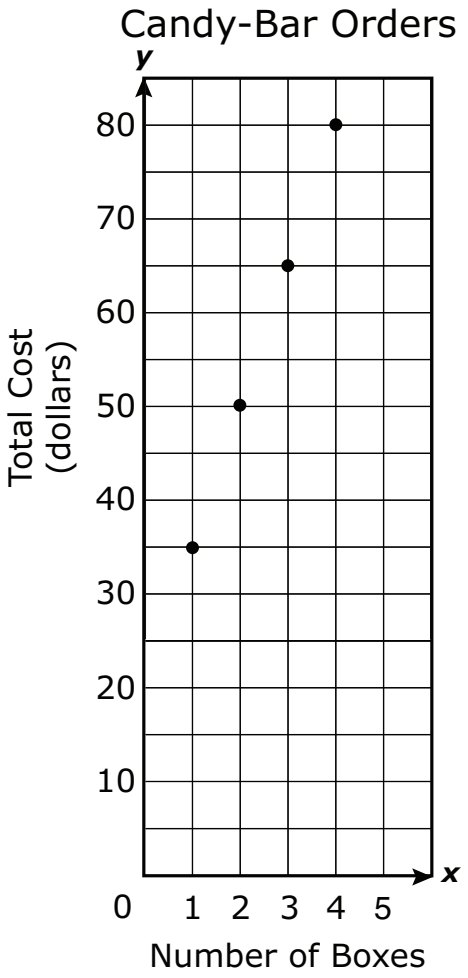

Based on the graph, which of the following best describes this situation?

A Each box of candy bars costs $20.

B Each box of candy bars costs $15.

C Each box of candy bars costs $12.

1 Which of the following best represents the solution to the system of linear equations shown below?

$$3x - 8y = -18$$

$$6x + 3y = 21$$

A

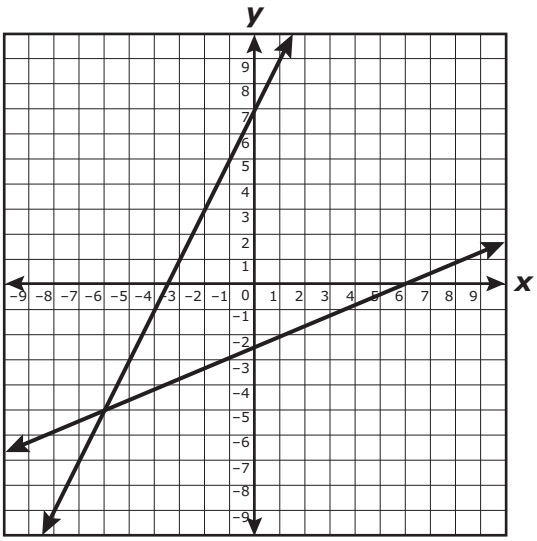

C

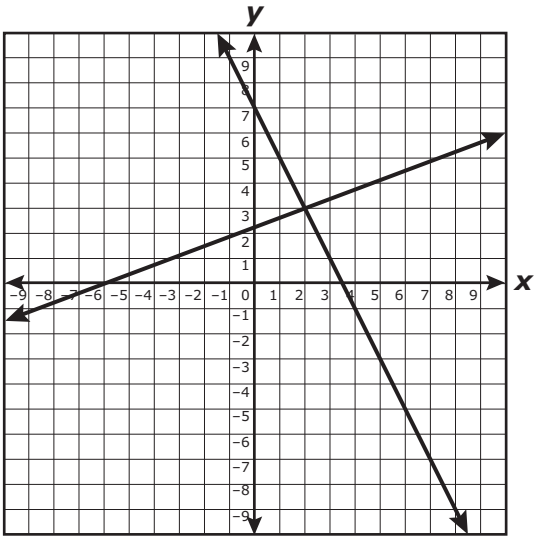

B

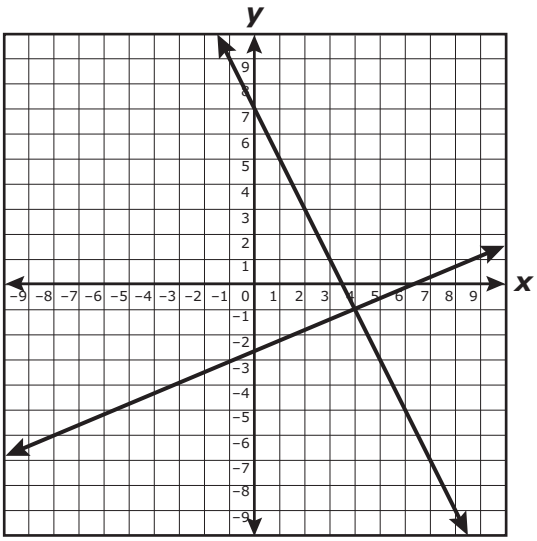

1 The graph of a function of the form $y = ax^2 + c$ has a vertex located above the origin and opens downward. Which of the following could be the values of a and c?

A $a = -2$ and $c = 5$

B $a = 2$ and $c = 5$

C $a = 2$ and $c = -5$

2 What is the solution set for the equation $n^2 - 9 = 27$?

A $\{-3\sqrt{2}, 3\sqrt{2}\}$

B $\{-6, 6\}$

C $\{-18, 18\}$

1 Look at triangle *QRT* graphed on the coordinate grid below.

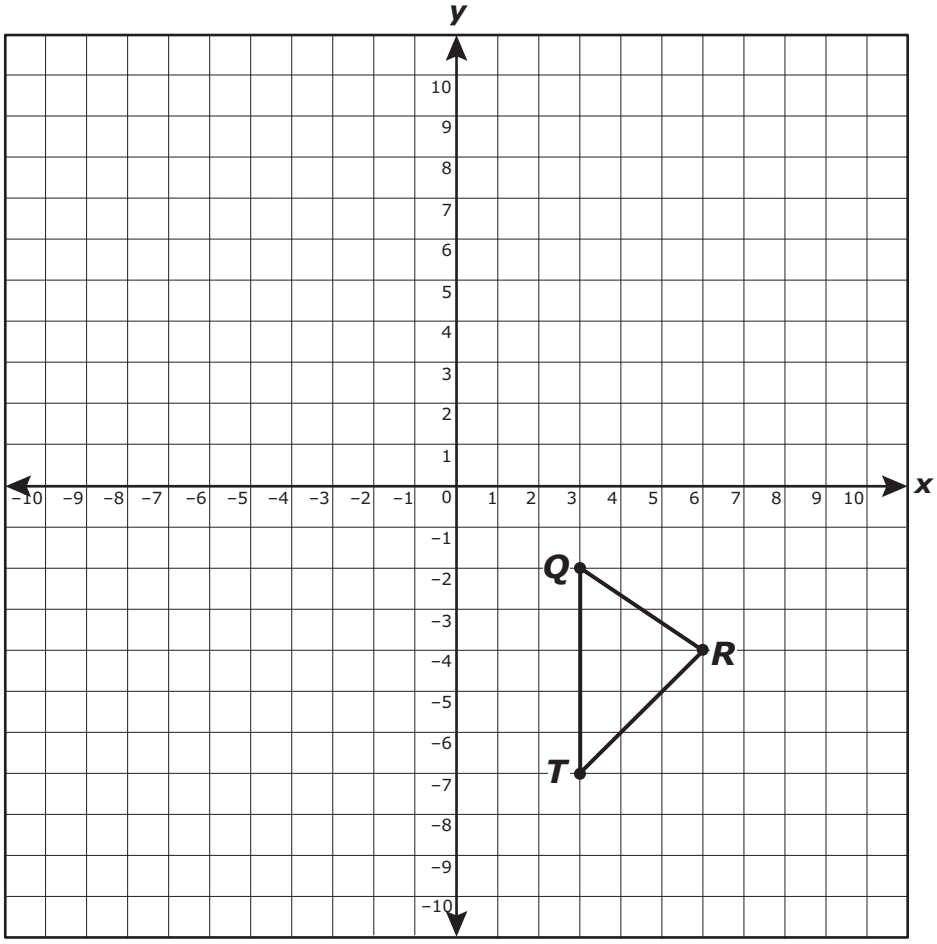

Which coordinates represent the vertices of a triangle congruent to triangle *QRT*?

A (–2, –2), (–4, 1), (–7, –2)

B (1, 2), (–3, 5), (1, 6)

C (0, –5), (–3, –1), (–5, –5)

1 Which of the following best describes the graph of the system of equations shown below?

$$y = \frac{3}{7}x + 2$$

$$y = \frac{7}{3}x + 4$$

A The lines are parallel.

B The lines intersect but are not perpendicular.

C The lines intersect and are perpendicular.

1 Look at trapezoid *LKNP* below. The given side lengths are in inches (in.).

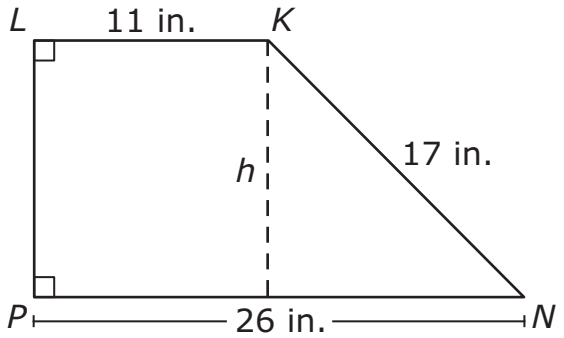

Pythagorean Theorem
$a^2 + b^2 = c^2$

Which of these is *h*, the height of trapezoid *LKNP*?

A 23 in.

B 8 in.

C 13 in.

2 Miguel has a rectangular prism with the dimensions in centimeters (cm) shown below. The prism is filled to capacity with water.

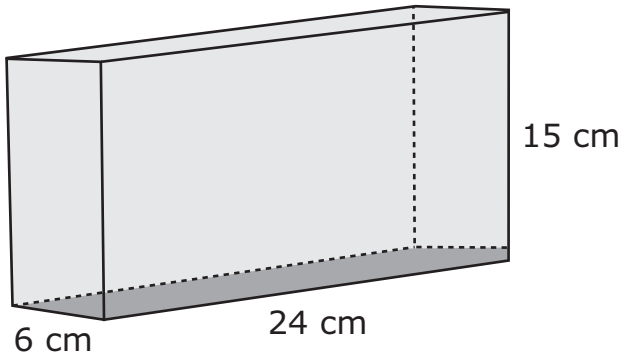

Which of the following prisms will hold the same amount of water as Miguel's prism holds?

A

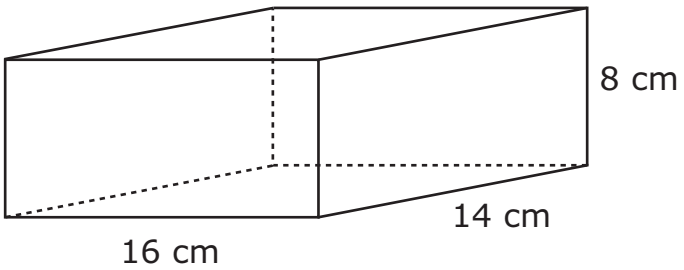

B

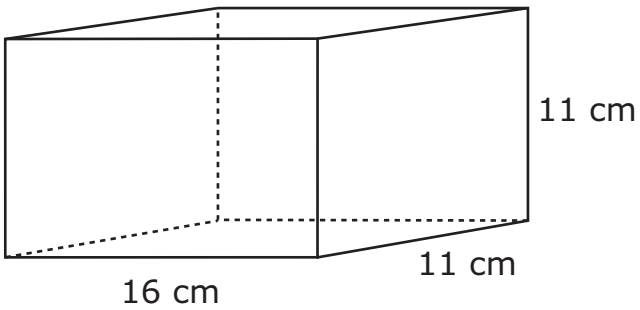

C

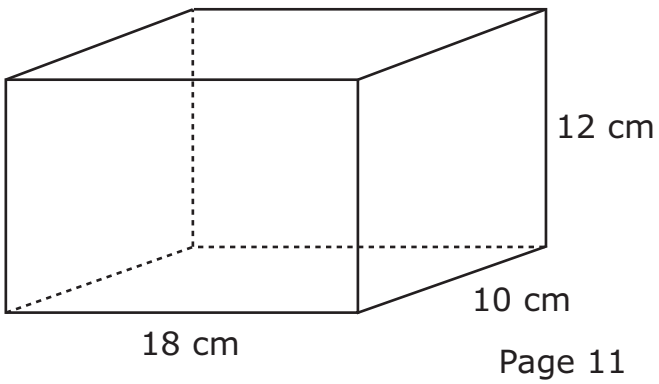

3 Look at the drawing below. It can be used to find x, the width of a pond at its widest point.

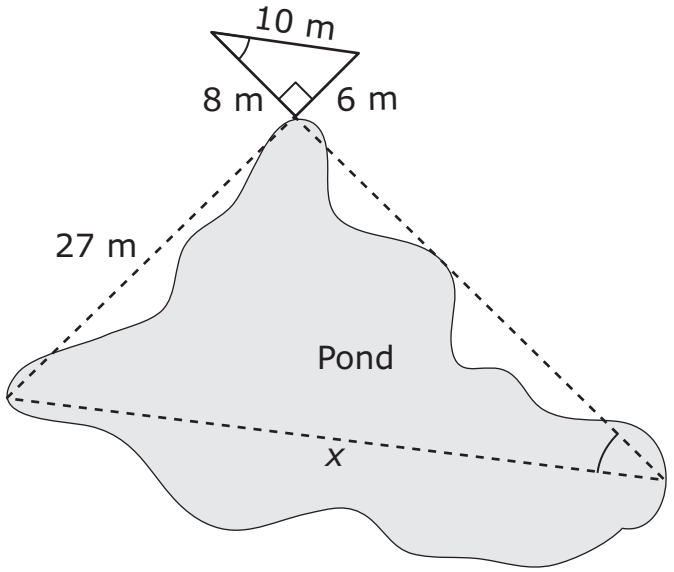

What is the value of x?

A 34 meters

B 45 meters

C 22 meters

1 The table below shows the approximate area in square miles of 4 deserts.

Approximate Area of Deserts

Desert	Area (square miles)
Gobi	500,000
Great Sandy	150,000
Mojave	15,000
Sahara	3,500,000

Which of the following conclusions is most accurate?

A The Sahara is more than 25 times the size of the Great Sandy Desert.

B The areas of the Mojave Desert and the Great Sandy Desert combined are about 5% of the area of the Sahara.

C Of the deserts listed in the table, the Sahara represents about 35% of the total area listed.

1 Andi is learning about special right triangles. She claims that if a right triangle has side lengths that are integers, then the mean of the lengths of the shortest side and the longest side is equal to the length of the remaining side. Which of these examples shows that Andi's claim is false?

A A triangle with side lengths of 39 units, 52 units, and 65 units

B A triangle with side lengths of 10 units, 24 units, and 26 units

C A triangle with side lengths of 6 units, 8 units, and 10 units

Item Number	Student Expectation	Correct Answer
OBJECTIVE 1		
1	A.1 (E)	B
OBJECTIVE 2		
1	A.2 (B)	C
OBJECTIVE 3		
1	A.5 (A)	C
2	A.6 (A)	B
OBJECTIVE 4		
1	A.8 (B)	C
OBJECTIVE 5		
1	A.9 (D)	A
2	A.10 (A)	B
OBJECTIVE 6		
1	G.10 (A)	A
OBJECTIVE 7		
1	G.7 (B)	B
OBJECTIVE 8		
1	G.8 (C)	B
2	G.8 (D)	C
3	G.11 (C)	B
OBJECTIVE 9		
1	8.13 (B)	B
OBJECTIVE 10		
1	8.16 (B)	B