STAAR™ Modified

State of Texas Assessments of Academic Readiness — Modified —

Geometry

Modified

2011 Released Test Questions

These released test questions represent how the modification process can be applied to the 2011 STAAR Released Test Questions. Not every STAAR released test question has been modified. These test questions are samples only and do not represent all the TEKS student expectations from each reporting category eligible for assessment. Nor do they represent all the ways in which a test question can be modified.

Copyright © 2011, Texas Education Agency. All rights reserved. Reproduction of all or portions of this work is prohibited without express written permission from the Texas Education Agency.

1 Triangle *XYZ* is shown below.

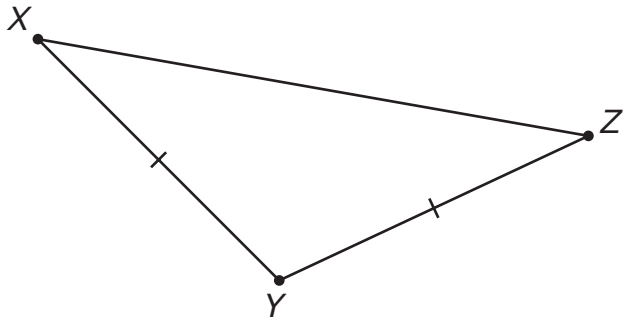

Which of the following statements regarding *XZ* is always true?

A $XZ = XY$

B $XZ = XY + YZ$

C $XZ < XY + YZ$

---

2 Which set of statements represents a valid deductive argument?

A All quadrilaterals have 4 angles.
All parallelograms have 4 angles.
All quadrilaterals are parallelograms.

B All rectangles have 4 right angles.
All squares have 4 right angles.
All rectangles are squares.

C All parallelograms have 4 sides.
All figures with 4 sides are quadrilaterals.
All parallelograms are quadrilaterals.

3 In each of the circles below, four angles are formed by the intersection of 2 secant lines. The measures of two intercepted arcs and one angle are shown for the first three circles.

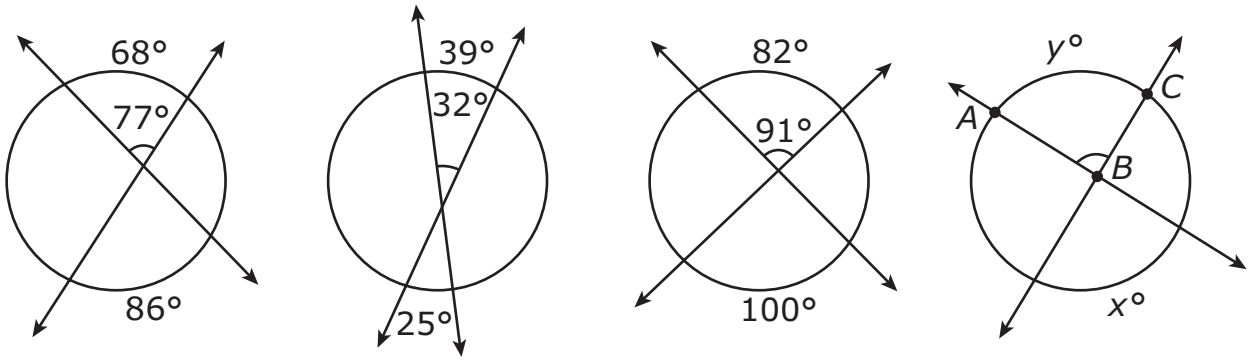

Which expression can be used to represent $m\angle ABC$ in degrees?

A $\frac{1}{2}(x - y)$

B $\frac{1}{2}(x + y)$

C $2(x + y)$

4 Jake took pictures of Ana's flag while she was practicing her routine for the football game, as shown below.

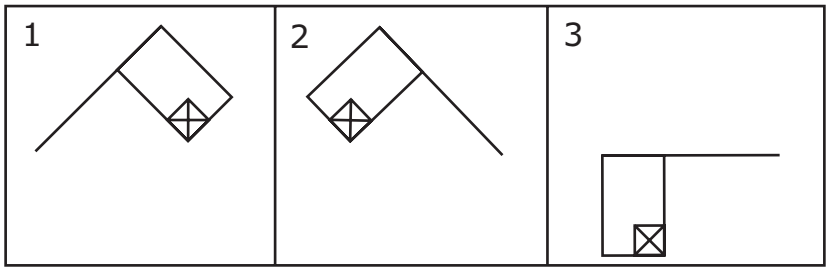

Which of the following best describes the movement of the flag from picture to picture?

A Reflection, rotation

B Rotation, translation

C Reflection, translation

5 When viewed from above, the base of a fountain has the shape of a hexagon composed of a square and 2 congruent isosceles right triangles, as represented in the diagram below.

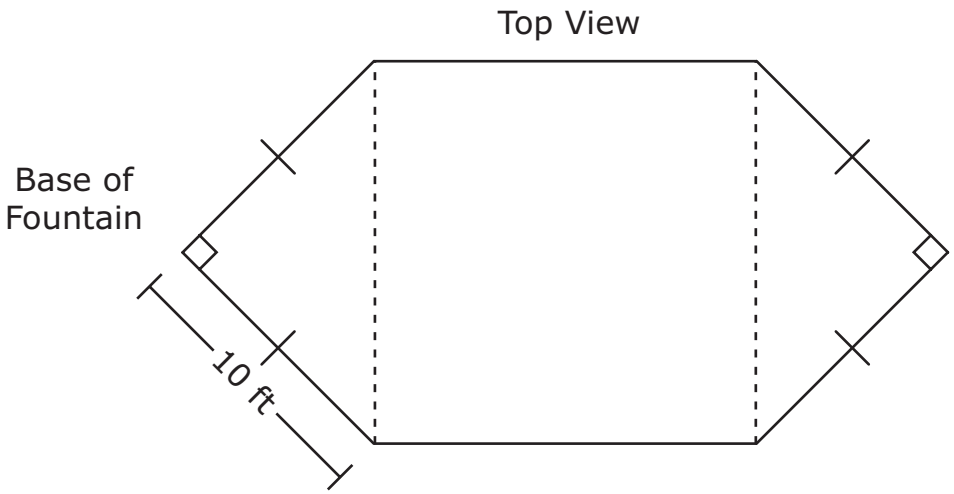

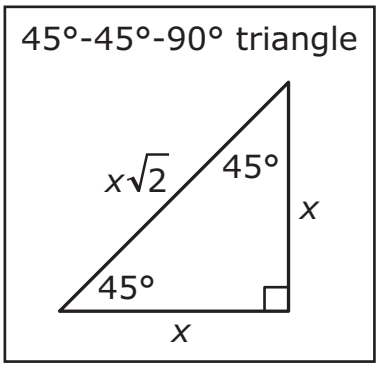

Which measurement represents the perimeter in feet of the hexagonal base of the fountain?

A $(40 + 40\sqrt{2})$ ft

B $(20 + 20\sqrt{2})$ ft

C $(40 + 20\sqrt{2})$ ft

6 A side view of the intersection of a plane and a square pyramid is modeled below.

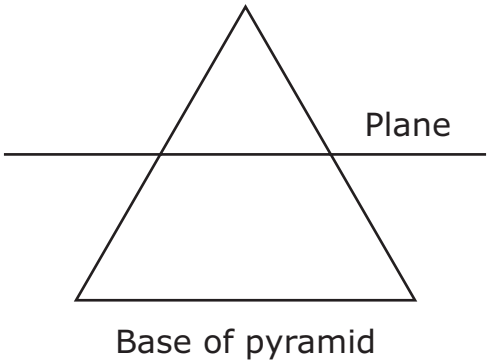

Which of the following best represents the shape formed by this intersection?

A

B 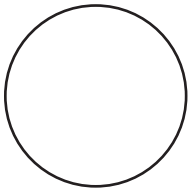

C 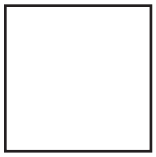

7 $\overline{RG}$ is graphed on the coordinate grid below.

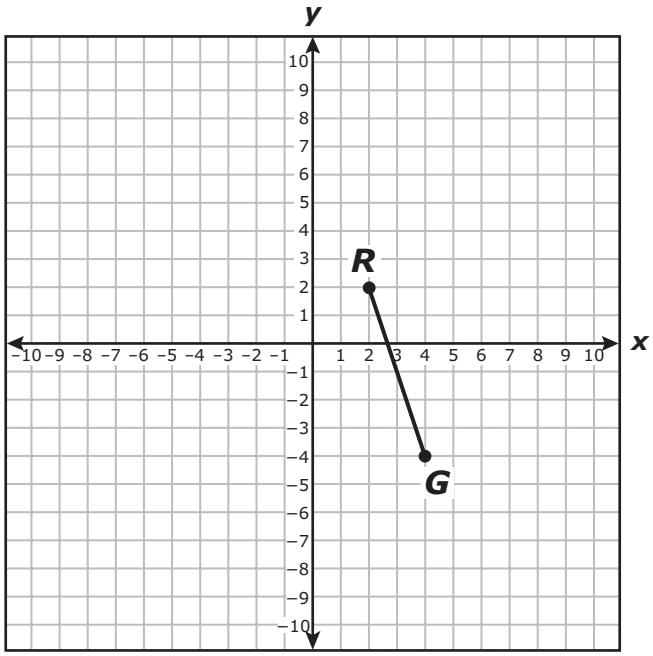

What is the slope of a line segment that is perpendicular to $\overline{RG}$?

A $\frac{1}{3}$

B -3

C $-\frac{1}{3}$

8 Part of a basketball court is shown below. The shaded region is composed of a rectangle and a semicircle.

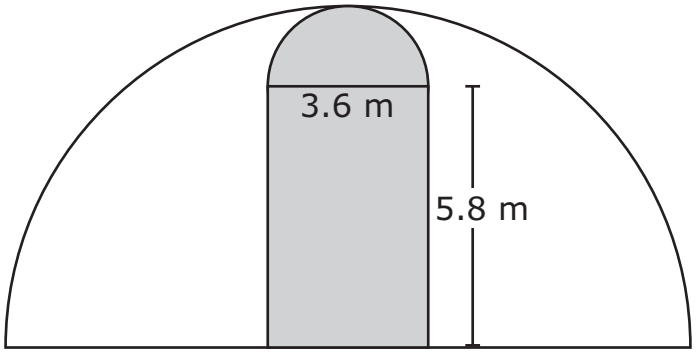

$A = \pi r^2$ Area of a circle = π • radius • radius
$A = bh$ Area of a rectangle = base • height

If 1 square meter is approximately equal to 11 square feet, which of the following is closest to the area of the shaded region in square feet?

A 26 ft^2

B 342 ft^2

C 286 ft^2

9 In quadrilateral *ABCD*, $\overline{AB} \parallel \overline{CD}$, $\angle A \cong \angle B$, and $\overline{AB} \ncong \overline{CD}$. Which of the following statements is a reasonable conclusion?

A Quadrilateral *ABCD* is a rectangle.

B Quadrilateral *ABCD* is an isosceles trapezoid.

C $\overline{AD} \parallel \overline{BC}$

---

10 Triangles *RST* and *VSU* are shown below.

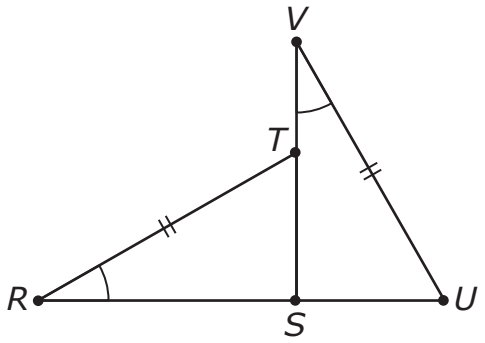

$\angle R \cong \angle V$, and $\overline{RT} \cong \overline{VU}$. Which additional condition is sufficient to prove that $\Delta RST \cong \Delta VSU$?

A $\overline{TS} \cong \overline{SU}$

B $\overline{VS} \perp \overline{RU}$

C $\overline{RS} \cong \overline{SU}$

11 Triangle *RST* was dilated to create triangle *R′S′T′*, as shown on the coordinate grid below.

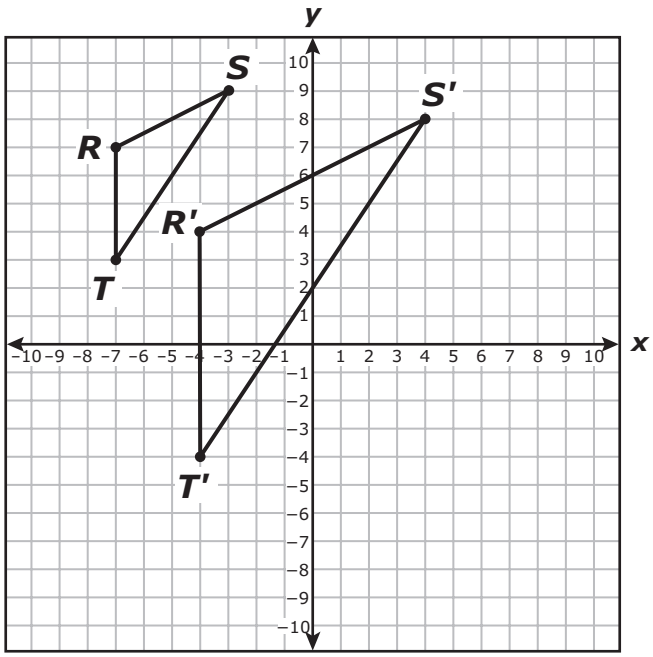

Which statement appears to be true?

A The center of dilation used to create $\triangle R'S'T'$ was (10, 8).

B $\triangle RST$ and $\triangle R'S'T'$ are congruent.

C The scale factor used to create $\triangle R'S'T'$ is 2.

12 A tree's shadow is 4.8 m long on level ground, as shown in the diagram.

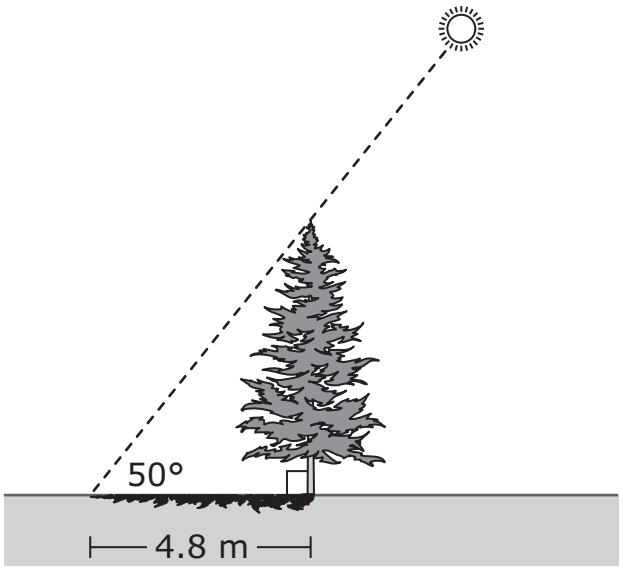

Trigonometric ratios

$$\sin A = \frac{\text{opposite leg}}{\text{hypotenuse}}$$

$$\cos A = \frac{\text{adjacent leg}}{\text{hypotenuse}}$$

$$\tan A = \frac{\text{opposite leg}}{\text{adjacent leg}}$$

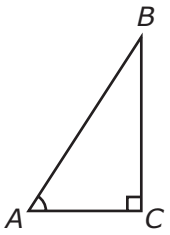

The angle of elevation from the tip of the shadow to the sun is 50°. Based on this information, which of the following is closest to the height of the tree?

A 3.6 m

B 5.7 m

C 7.5 m

13 A company packages their product in two sizes of cylinders. Each dimension of the larger cylinder is twice the size of the corresponding dimension of the smaller cylinder.

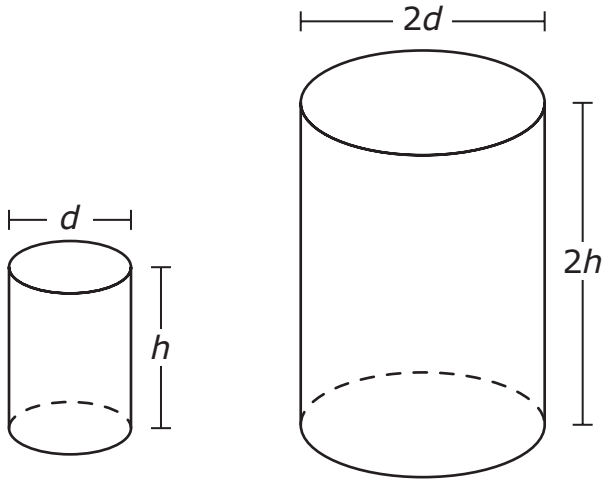

$V = Bh$

Volume of a cylinder $= \pi \cdot$ radius $\cdot$ radius $\cdot$ height

Based on this information, which of the following statements is true?

A The volume of the larger cylinder is 4 times the volume of the smaller cylinder.

B The volume of the larger cylinder is 8 times the volume of the smaller cylinder.

C The volume of the larger cylinder is 6 times the volume of the smaller cylinder.

Item Number	Reporting Category	Readiness or Supporting	Content Student Expectation	Correct Answer
1	1	Readiness	G.2(B)	C
2	1	Supporting	G.3(E)	C
3	2	Readiness	G.5(A)	B
4	2	Supporting	G.5(C)	A
5	2	Readiness	G.5(D)	C
6	3	Supporting	G.6(A)	C
7	3	Readiness	G.7(B)	A
8	4	Supporting	G.8(F)	C
9	4	Supporting	G.9(B)	B
10	4	Readiness	G.10(B)	B
11	5	Supporting	G.11(A)	C
12	5	Readiness	G.11(C)	B
13	5	Readiness	G.11(D)	B

For more information about the new STAAR Modified assessments, go to www.tea.state.tx.us/student.assessment/special-ed/staarm/.